INSTRUCTION SHEET — 9397B HYDRAULIC ANGLING

APPLICATION

Rotary brooms: 9393A – page 1
HB60, HB72 – page 3
BR6022, BR7222 – page 6

INSTALLATION

9393A MODEL
(Figures A & B)

1. **FIGURE A:** Remove handle and broom angling plate by removing the 3/16" x 1" spring pin and the spring.
2. **FIGURE B:** With the cylinder ports facing you toward the outside of broom, install the cylinder base end on the pivot arm. Secure from under the pivot arm with a 5/8"NC x 4" carriage bolt and 5/8"NC stover nut (items 6-8).
3. **FIGURE B:** Install the cylinder rod end to 3 point frame using a 5/8"NC x 2 1/2" hex. bolt and 5/8"NC stover nut (items 7-8).
4. **FIGURE B:** Using thread sealant, install the 90° elbow (item 5) and the flow restrictor (item 9) in cylinder ports. Set elbow and flow restrictor at an appropriate angle to facilitate the routing of the hoses under the tension adjustment spring (approximately 2 o'clock).
5. **FIGURE B:** Connect the 3/8" x 42" hose (item 3) on the elbow (item 5) and the 3/8" x 47" hose (item 2) on the flow restrictor (item 9).
6. **FIGURE B:** Connect the other end of the cylinder hoses to the extension hoses (item 4):
   - 20" hoses (supplied with the power hydraulic angle) for *Rear Mount.*
   - OR 210" hoses (supplied with the front loader mount package) for *Front Mount.*
6. Connect the cylinder hoses assembly to two male quick couplers (that you must provide) then to the tractor hydraulic outlets.

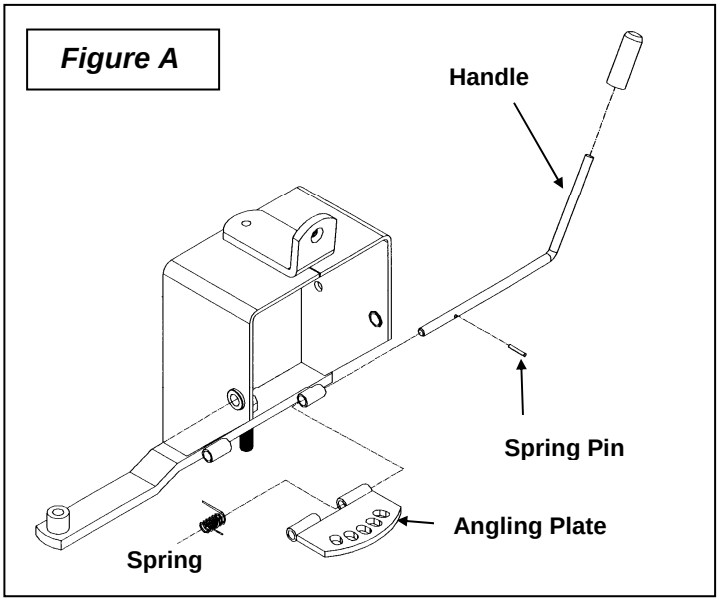

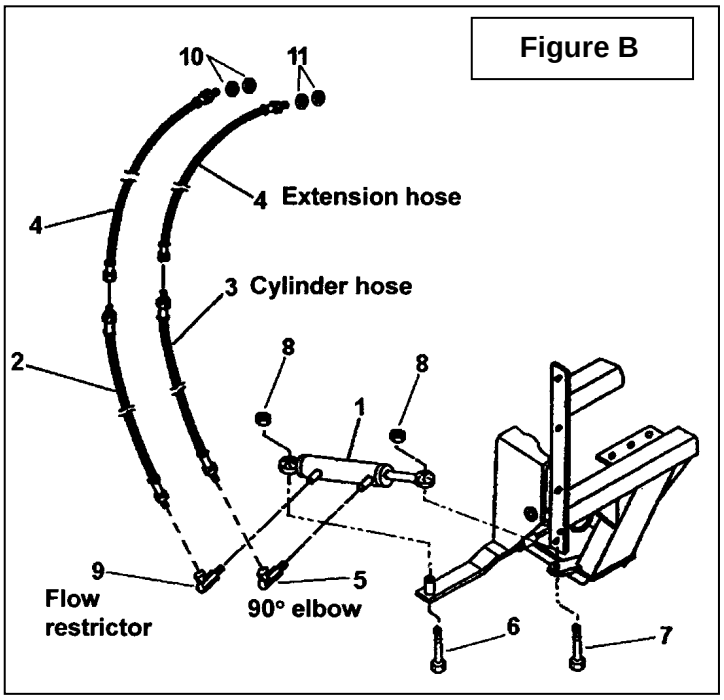

8. **FIGURE B:** Install a yellow identification ring (item 10) on connector of one hose and the other yellow identification ring on the associated hydraulic tractor valve intake. Install a green identification ring (item 11) on connector of the second hose and the other green identification ring on the second associated hydraulic tractor valve intake.

9. When engine has started and the oil flows in the hydraulic circuit, turn off the engine, verify oil level and add some if needed.

NOTE: When operating the tractor valve, if the broom angling movement is not as desired, turn off the engine, reverse the valve quick couplers and associate the appropriate identification ring color (fig. B, items 10 & 11).

WARNING: To avoid serious personal injury. Escaping hydraulic/ diesel fluid under pressure can penetrate the skin causing serious injury.

- **Do not use your hands to check for leaks. Use a piece of cardboard or paper to search for leaks.**

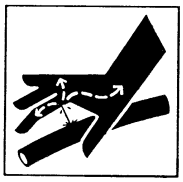

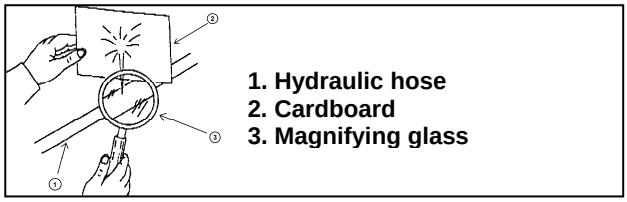

- **Stop engine and relieve pressure before connecting or disconnecting lines.**
- **Tighten all connections before starting engine or pressurizing lines.**

If any fluid is injected into the skin, obtain medical attention immediately or gangrene may result.

HB60, HB72 MODELS
(Figures C-D-E)

1. **FIGURE C:** Remove handle (item 2) and broom angling plate (item 3) by removing the 3/16" x 1" spring pin (item 1) and the spring (item 4).
2. **FIGURE D:**, Using thread sealant, install the 90° elbow (item 5) and the flow restrictor (item 9) in cylinder ports. Set elbow and flow restrictor at a 12:00 o'clock angle.
3. **FIGURE D:** With the cylinder ports facing you toward the outside of broom install the cylinder rod end to 3 point frame using a 5/8"NC x 5" hex. bolt and 5/8"NC stover nut (items 7-8).
4. **FIGURE D:** Install the cylinder base end on the pivot arm. Secure from under the pivot arm with a 5/8"NC x 4" carriage bolt and 5/8"NC stover nut (items 6-8).
5. **FIGURE D:** Connect the 3/8" x 42" hose (item 3) on the elbow (item 5) and the 3/8" x 47" hose (item 2) on the flow restrictor (item 9).

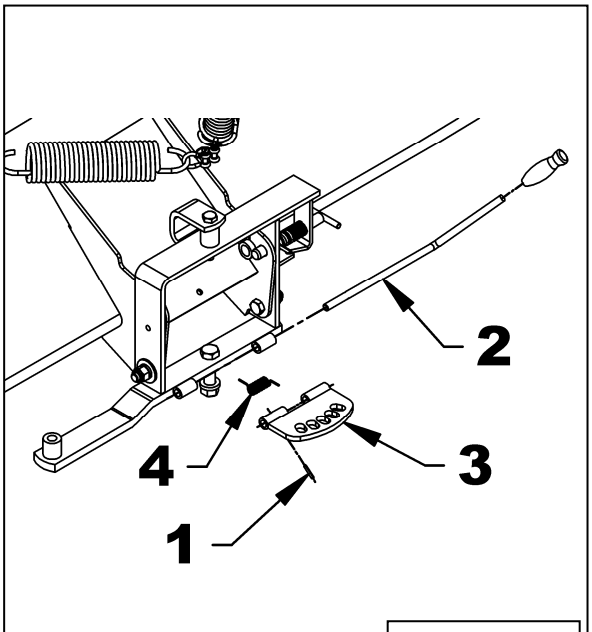

Figure C

6. **FIGURE E:** Attach hoses (item 1) to the universal hitch coupler (item 5) with the hose clamp (item 2), a 3/8"NC x 1 1/4" lg. hex bolt (item 3) and 3/8"NC nylon insert locknut (item 4).

   IMPORTANT: Before tightening the hose clamp (item 2) take care to let enough length hoses (item 1) to let the cylinder makes its course without stretching hoses (item 1).
7. **FIGURE D:** If necessary, connect the 3/8" x 20" hoses (item 4) to the 3/8" x 42" hose (item 3) and 3/8" x 47" hose (item 2).

WARNING: To avoid serious personal injury. Escaping hydraulic/ diesel fluid under pressure can penetrate the skin causing serious injury.

- **Do not use your hands to check for leaks. Use a piece of cardboard or paper to search for leaks.**

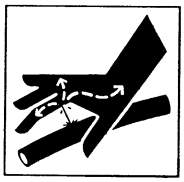

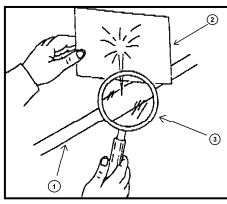

- **Stop engine and relieve pressure before connecting or disconnecting lines.**
- **Tighten all connections before starting engine or pressurizing lines.**

If any fluid is injected into the skin, obtain medical attention immediately or gangrene may result.

8. Connect hoses to the tractor valve. Note: hydraulics connectors are used to connect hoses to tractor valve and are not included with this product.

9. **FIGURE D:** Install a yellow identification ring (item 10) on connector of one hose and the other yellow identification ring on the related hydraulic tractor valve intake. Install a green identification ring (item 11) on connector of the second hose and the other green identification ring on the second related hydraulic tractor valve intake.

10. When engine has started and the oil flows in the hydraulic circuit, turn off the engine, verify oil level and add some if needed.

NOTE: When operating the tractor valve, if the broom angling movement is not as desired, turn off the engine, reverse the valve quick couplers and appropriate the identification rings related color. (fig. D, items 10 et 11).

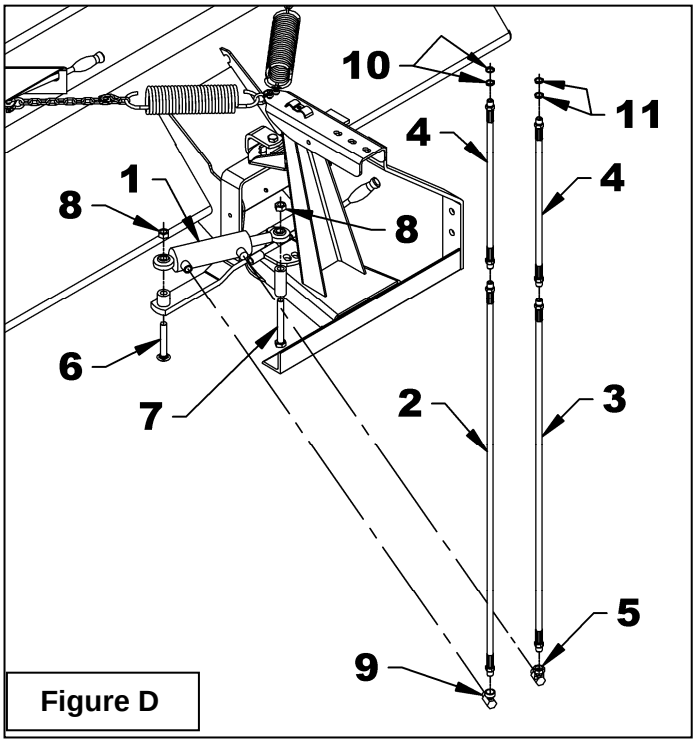

Figure D

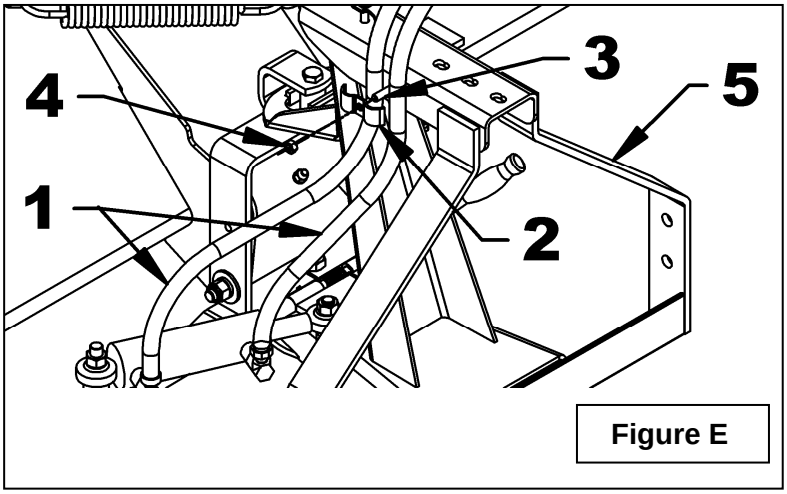

Figure E

BR6022, BR7222 MODELS
(Figures F-G-H)

1. **FIGURE F:** Remove handle (item 2) and broom angling plate (item 3) by removing the 3/16" x 1" spring pin (item 1) and the spring (item 4).
2. **FIGURE G:**, Using thread sealant, install the 90° elbow (item 5) and the flow restrictor (item 9) in cylinder ports. Set elbow and flow restrictor at a 12:00 o'clock angle.
3. **FIGURE G:** With the cylinder ports facing you toward the outside of broom install the cylinder rod end to 3 point frame using a 5/8"NC x 3 1/4" hex. bolt and 5/8"NC stover nut (items 7-8).
4. **FIGURE G:** Install the cylinder base end on the pivot arm. Secure from under the pivot arm with a 5/8"NC x 3 1/2" carriage bolt and 5/8"NC stover nut (items 6-8).
5. **FIGURE G:** Connect the 3/8" x 42" hose (item 3) on the elbow (item 5) and the 3/8" x 47" hose (item 2) on the flow restrictor (item 9).

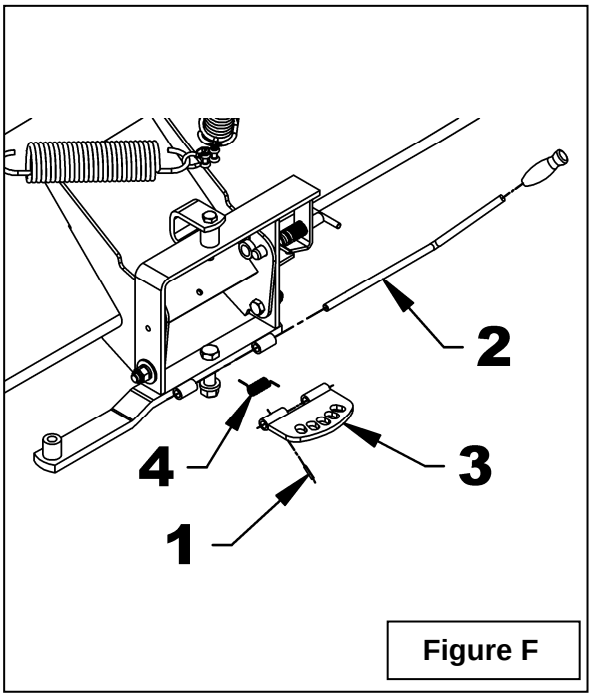

Figure F

6. **FIGURE H:** Attach hoses (item 1) to the universal hitch coupler (item 5) with the hose clamp (item 2), a 3/8"NC x 1 1/4" lg. hex bolt (item 3) and 3/8"NC nylon insert locknut (item 4).

   IMPORTANT: Before tightening the hose clamp (item 2) take care to let enough length hoses (item 1) to let the cylinder makes its course without stretching hoses (item 1).
7. **FIGURE G:** If necessary, connect the 3/8" x 20" hoses (item 4) to the 3/8" x 42" hose (item 3) and 3/8" x 47" hose (item 2).

WARNING: To avoid serious personal injury. Escaping hydraulic/ diesel fluid under pressure can penetrate the skin causing serious injury.

- **Do not use your hands to check for leaks. Use a piece of cardboard or paper to search for leaks.**

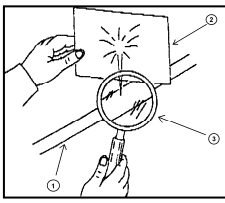

- **Stop engine and relieve pressure before connecting or disconnecting lines.**
- **Tighten all connections before starting engine or pressurizing lines.**

If any fluid is injected into the skin, obtain medical attention immediately or gangrene may result.

8. Connect hoses to the tractor valve. Note: hydraulics connectors are used to connect hoses to tractor valve and are not included with this product.
9. **FIGURE G:** Install a yellow identification ring (item 10) on connector of one hose and the other yellow identification ring on the related hydraulic tractor valve intake. Install a green identification ring (item 11) on connector of the second hose and the other green identification ring on the related hydraulic tractor valve intake.
10. When engine has started and the oil flows in the hydraulic circuit, turn off the engine, verify oil level and add some if needed.

NOTE: When operating the tractor valve, if the broom angling movement is not as desired, turn off the engine, reverse the valve quick couplers and appropriate the identification rings related color. (fig. G, items 10 et 11).

Figure G

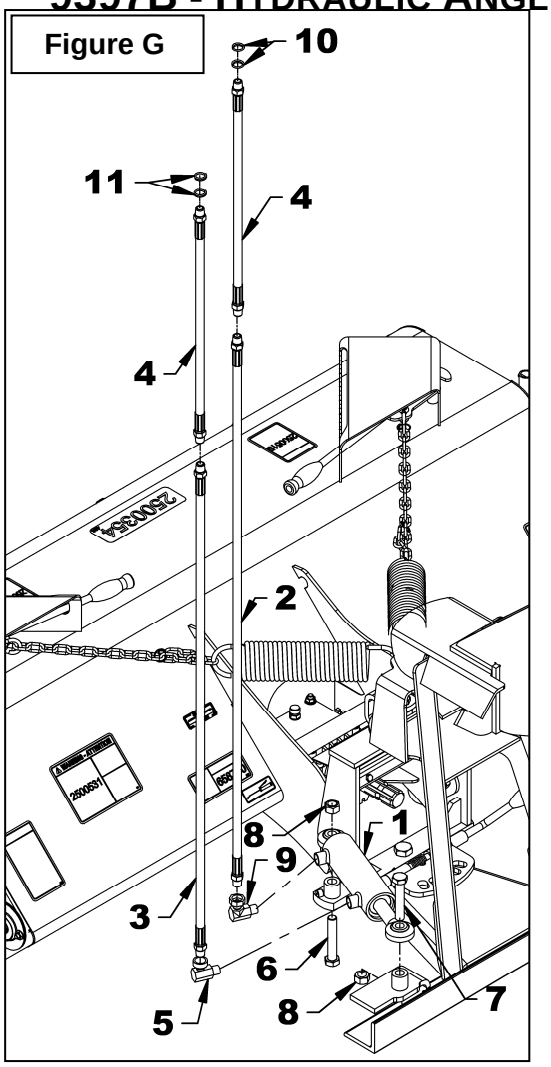

Figure H

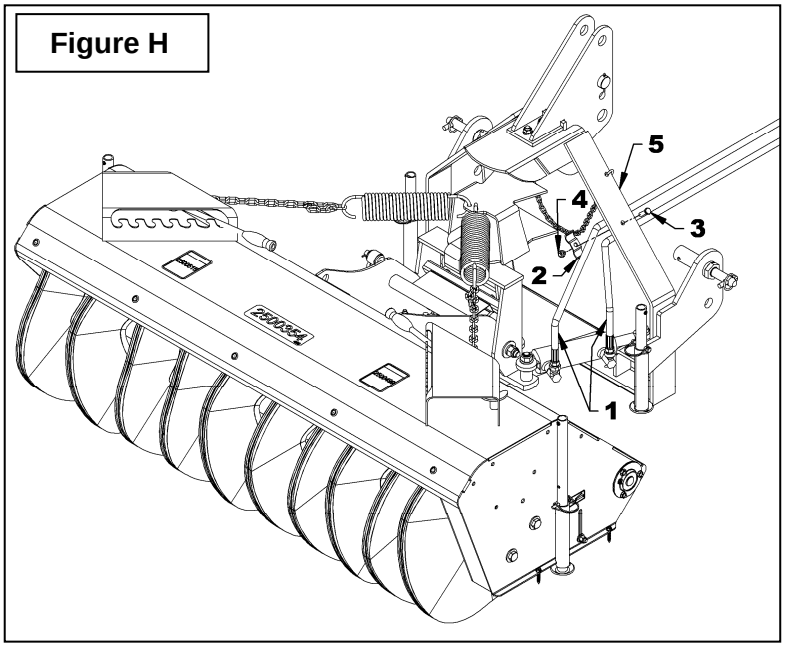

PARTS
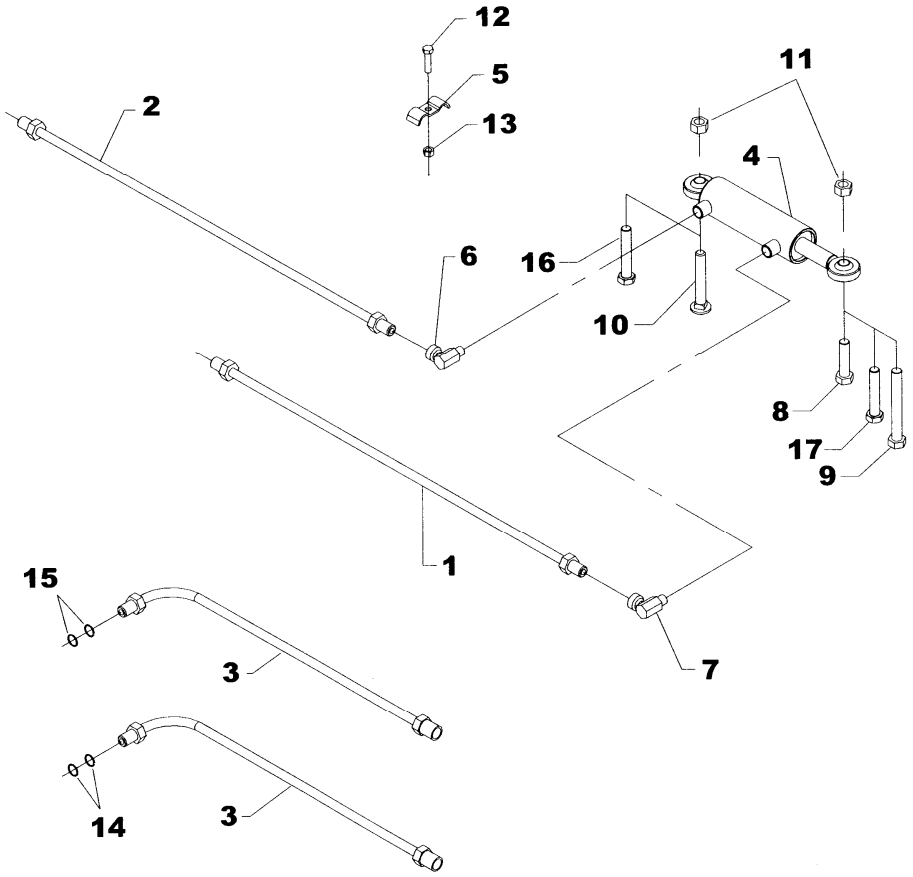
REF.	DESCRIPTION	QTY	PART #
1	Hose 3/8" x 42"	1	660445
2	Hose 3/8" x 47"	1	666583
3	Extension hose 3/8" x 20"	2	660447
4	Cylinder	1	3900508
	Seal kit	1	665017
5	Hose clamp	1	660440
6	Flow restrictor	1	3900204
7	Elbow 90 degree.	1	654557
8	Bolt hex. 5/8"NC x 2 1/2" lg., PTD	1	O/L
9	Bolt hex. 5/8"NC x 5" lg., PTD	1	O/L
10	Carriage Bolt 5/8"NC x 4" lg., PTD	1	0300029
11	Stover nut 5/8"NC, PTD	2	1100007
12	Bolt hex. 3/8"NC x 1 1/4" lg., PTD	1	O/L
13	Nylon insert locknut 3/8"NC, PTD	1	O/L
14	Identification ring, yellow	2	658206
15	Identification ring, green	2	658209
16	Bolt hex. 5/8" NC x 3 1/2" lg, PTD	1	O/L
17	Bolt hex. 5/8" NC x 3 1/4" lg, PTD	1	O/L